Fireye Surefire II High Energy Igniters

DESCRIPTION

The Surefire II High-Energy Ignition System is used for direct spark ignition of most gas or liquid fuels used in oil or gas igniters or main burners. The High-Energy Ignition System is available in various versions. To ensure optimal operation, the first part of the ignition tip should always be in an ignitable fuel-air mixture, during all modes of operation.

After successful ignition, the ignition tip should be disconnected from the power supply and taken out of the flame. Optionally, when an automated process is required, a pneumatic retraction unit and systems for hazardous areas are available.

The Surefire II range includes:

Integrated power pack with spark rod.

Split Power pack and separate spark rod.

Portable battery powered Integrated power pack and spark rod.

ATEX, Power pack, and spark rods.

Co-axial Retractors, with / without integrated solenoid valve.

ATEX Solenoid.

Features

Selectable voltage (115/230 vac).

Visual indication of spark operation

Proof of spark relay

Choice of system, Integrated or Kit or Kit with Quick Disconnect

Thermal cutout protection integrated in transformer

ATEX options

Compact "co-axial" retractors

Safety bleed resistor discharges capacitors in 120 seconds.

APPLICATIONS

High Energy Spark Igniters (HESI) are well suited to ignite most gaseous and liquid fuels, either by first igniting a pilot or directly igniting the main burner.

The HESI is classified as being a class 3 special igniter (NFPA regulations).

Burner designers should ensure the correct position of the igniter tip, and the maximum capacity of flame to be ignited to ensure compliance with prevailing regulations.

Typical applications

- Petro chemical, and refineries, (frequently ATEX style).
- Heaters, Reformers. Metal industries, Kilns.
- Power burners, Steam raising plants.
- Direct, and pilot ignition. Paper industry
- Black liquor boilers

TABLE OF CONTENTS

Description. 1
Features. 1
Typical applications 2
Table of Contents 3
Image directory 3
Safety instructions and precautions. 4
Limitations of liability. 4
Device component overview. 5
Overview of the different versions.. 6
Specifications 10
Electrical connection (230 VAC) (regarding image 4):.... 12
Exchangeable ignition tips. 13
Operation 14
Note for use in an oil burner.... 14
Note for use in a gas burner... 14
Maintenance. 16
Troubleshooting 16
Retraction systems 18
Notice. 24
Warranties. 24

Image directory

Figure 1: Ignition unit with fixed ignition electrode and retraction handle 6
Figure 2: Ignition electrode and ignition unit in kit form (HE-Kit-QD) plug-in version 7
Figure 3: Ignition electrode and ignition unit in kit form (HE-Kit). 8
Figure 4: Electrical connection of high-energy ignition unit HE-PP-12 12
Figure 5: Latching switch for switching the supply voltage 13
Figure 6: Electrical connection of the ignition electrode in the connection box 13
Figure 7: HE-S short ignition tip: screwed in, 200 mm. 13
Figure 8: HE-L long ignition tip: screwed in, 675 mm 13
Figure 9: ATEX Enclosure: 17
Figure 10: Retraction dimensions fully inserted:. 19
Figure 11: Retractor: 20
Figure 12: Retractor Mounts:. 21
Figure 13: Attaching the HESI to the retractor:. 22

Safety instructions and precautions

Safe use and operation:

Improper handling can result in significant personal injuries and damage to property.

Only an appropriately qualified operator or electrician should perform work on this high-energy ignition system.

Operator is a person who is responsible for installing, operating, adjusting, maintaining, cleaning, repairing or transport of equipment, so that possible dangers can be recognized and avoided.

Electrician is a person with appropriate professional training, knowledge and experience, able to recognize and avoid dangers caused by electricity.

The high-energy ignition system (or parts of it) is (are) not intended for climbing or for standing on.

The high-energy ignition (HEI) system can only be operated in conjunction with additional flame monitoring measures.

During ignition, electromagnetic interference may occur.

Safety during storage, assembly, installation and maintenance

Appropriate transport, professional storage, installation and assembly, as well as careful operation, are prerequisites for impeccable and safe operation of the equipment.

Touching live components can lead to fatal injuries. Regular visual verification by the user should therefore be specified. This visual inspection is limited to the integrity of the connected cables, mechanical connections and ensuring the screws are securely tightened. Verification of compliance with the permissible ambient temperatures is also required.

The ignition electrode of the high-energy ignition system may only be operated with the lid of the installed ignition unit closed (and depending on the version, with undamaged protection sleeve), by using a pneumatic guide in the combustion chamber.

As a voltage of 2000 V is generated in the ignition unit, it is imperative that the ignition system will be taken out of service and sent for repair when any damage is found. Before any work is carried out, the power supply must be switched off, secured against switching back on and checked to make sure it is not live.

It takes at least 120 seconds for the capacitors of the high-energy ignition equipment to discharge. After this time, work on the high-energy ignition system can be carried out.

In case of a necessary expansion of the high-energy ignition system, danger of getting burns may occur. All components, including internal components such as the ignition electrode and ignition tip need to be cooled down to ambient temperature before the system is extended. Use of protective gloves and protective clothing is required.

When assembling the HE-Kit versions, protective gloves should be worn. Additionally, it is also pointed out that there can be a risk through the use of pliers or whilst screwing in the ignition tip.

Limitations of liability

The manufacturer accepts no liability for damages due to:

1. Non-observance of the instruction manual.
2. Improper use.
3. Application by unqualified or untrained staff.
4. Unauthorized technical and mechanical modifications.
5. Use of unauthorized spare parts.
6. Use of defective and/or improperly repaired equipment.
7. Repairs carried out by third parties.

Device component overview

CB	Connection box standard
CB-QD	Connection box with quick disconnect (female)
HEC-3	High-energy cable in metal protection sleeve (with PE conductor) between the ignition unit and electrode, length 3 m
HEC-3-QD	High-energy cable in metal protection sleeve (with PE conductor) between the ignition unit and electrode with high voltage connectors with quick disconnect, length 3 m
HEC-5	High-energy cable in metal protection sleeve (with PE conductor) between the ignition unit and electrode, length 5 m
HEC-5-QD	High-energy cable in metal protection sleeve (with PE conductor) between the ignition unit and electrode with high voltage connectors with quick disconnect, length 5 m
HEC-10	High-energy cable in metal protection sleeve (with PE conductor) between the ignition unit and electrode, length 10 m
HE-SSR-0.0	Tip adapter spool with 14mm male thread, 325 mm long and connected 3m high tension cable
HE-KIT	Kit (version with fixed 3m long connecting cable) consisting of: HE-PP-12, HEC-3, HE-SSR-0.0, HE-L
HE-KIT-QD	Kit (version with plug-in connecting cable) consisting of: HE-PP-12-QD, HEC-3-QD, HE-SSR-0.0, HE-L
HE-PP-12	High-energy ignition unit Surefire II (for connection to connecting cable HEC-**X**[1])
HE-PP-12-INT	High-energy ignition unit Surefire II with integrated 20mm long female thread connection to allow the connection of the ET (Extension Tube, available in different lengths)
HE-PP-12-QD	High-energy ignition unit Surefire II (for connection to connecting cable HEC- **X**[1]-QD)
ET 0.5	Extension tube with one male and one female thread, length 0,5m
ET 1.0	Extension tube with one male and one female thread, length 1,0m
HE-CRD	Exchangeable full completed printed circuit board to be used in Power Pack for all versions (except the battery packed version)
GDT	Gas discharge tube
KCT-3	Spring, ceramic and 3m fixed high tension cable (to be used as a part of HE-SSR0.0)
HE-L	Exchangeable ignition tip, length: 675 mm (when screwed in)
HE-S	Exchangeable ignition tip, length: 200 mm (when screwed in)
	Atex enclosure.
GUB4PP	Atex enclosure complete with HESI power pack card
GUB4CR	Atex enclosure complete with HESI power pack card, base for an MBCE, and control/ interface relay.
HEC-3-ATEXA	3 mtr SWA High energy cable complete with ATEX glands to connect power pack to rod
HEC-5-ATEXA	5 mtr SWA High energy cable complete with ATEX glands to connect power pack to rod

Note: **X**[1] corresponds to the total length of the connecting cables between the ignition unit and electrode, in lengths of 3m, 5m and 10m, and must be specified when ordering.

Example of a 5 m connecting cable with high voltage connectors: HEC-5-QD.
NOTE: The maximum length of unsupported rod inside the burner is 700mm

Overview of the different versions

FIGURE 1. Ignition unit with fixed ignition electrode and retraction handle

Assembly: The High Energy System, consisting of the individual parts above, must be assembled by the user. The advantage is the reduced packed size, and resulting low shipping costs.

The complete length of the ignition rod is adjustable by addition of stainless steel extension tubes, each with male and female threading, in increments of 0.5 m, other lengths on request. The extension tube ET will be screwed into the existing 20mm mounting adapter on the side of the power pack housing. Having reached the desired length, pass the red high tension cable from the tip adapter HE-SSR-0.0 through the tube into the power pack and mount the tip adapter HE-SSR-0.0. Cut the red high tension cable 330 mm from the inside of the housing. The last 8mm of the insulation must be removed to allow the supplied ring terminal to be attached. This must be attached using the appropriate crimping pliers (specifically designed for insulated self-locking crimped on terminals). The self-locking feature ensures, by engaging at the endpoint, that the maximum available contact is achieved. This results in the full power, required for the high-energy ignition system, to be transmitted, allowing the unit to function properly. The ring terminal is attached to the high tension bolt on the printed circuit board. The ring is placed on top of the plain washer, followed by the serrated lock washer and finally locked on with the nut.

If a short ignition rod required, the tip adapter HE-SSR-0.0 can be screwed directly into the existing 20mm mounting adapter, and the ignition tip is screwed on.

The shortest available complete ignition rod length is 545 mm by using the HE-SSR-0.0 and the HE-S (20mm+325mm+200mm= 545mm), by using the HE-L it is 1020 mm.

The power supply cable must be provided by the customer and is not included in the delivery, but can be offered upon request.

A functioning ignition system consists of the following individual components:

HE-PP-12-INT: Power Pack with handle and rod connection (length 20 mm)

HE-SSR-0.0: Tip adapter, with fix connected 3m high tension cable (other lengths on request)

HE-S or HE-L: Ignition tip HE-S (length 200 mm) or HE-L (length 675 mm)

ET 0.5 / ET 1.0 (if required): ET 0.5 (length 500 mm) and/or ET 1.0 (length 1000 mm)

Carefully read through the whole of this page before first use and observe the information on page 15:

On the external PE connection (protective earth) of the high-energy supply unit, a cable with a minimum cross-section of 4 mm^2 must be connected to the earth potential point of the burner (see the assembly instruction below).

8mm of the insulation of the PE wire must be removed to allow the supplied yellow ring terminal to be attached, using the appropriate crimping pliers (specifically designed for insulated self-locking crimped on terminals). The self-locking feature ensures, by engaging at the endpoint, that the maximum available contact is achieved. This ensures that the full contact is available to provide maximum earth potential, allowing the system to function correctly. The yellow ring terminal is applied to the external earthing bolt on the casing with a plain washer first, then the ring terminal, followed by the serrated lock washer and finally the nut.

All other connections, with exception of the power supply cable to be provided by the customer, have already been made.

Connect the customer's power supply cable (after ensuring the power is off and secured against switching back on) to the high-energy ignition unit, connect the wires for ignition monitoring and supply power to the unit.

Switching on the power will immediately generate 4-5 ignition sparks per second. The transition of the ignition spark can be seen through the built-in inspection window. The ignition spark monitoring relay switches simultaneously.

In addition, the safety instructions on page 4 must also be respected, as a minimum.

FIGURE 2. Ignition electrode and ignition unit in kit form (HE-Kit-QD), plug-in version
Consists of: Power pack HE-PP-12 / HEC-3 / Tip adapter HE-SSR-0.0 / Tip Long HE-L, connection box CB and swivel connector

Assembly: The High Energy System, consisting of the individual parts above, must be assembled by the user. The advantage is the reduced packed size, and resulting low shipping costs.

Start the assembling with the ignition rod.

The complete length of the igniter is adjustable by the addition of stainless steel extension tubes, each with male and female threading, in increments of 0.5 m and 1m. The extension tube ET will be screwed onto the existing connection box and tightened with an appropriate spanner. Once the required length (less 325 mm for the tip adapter and required ignition tip HE-S with 200 mm or HE-L with 675 mm) is achieved, the red high voltage power cable of the tip adapter is fed directly through the remaining opening of the connection box, the 325 mm long tip adapter HE-SSR-0.0 is screwed onto the thread of the last extension tube and tightened tight with a suitable spanner. The red high voltage ignition cable of the tip adapter HE-SSR-0.0 is designed for a maximum ignition electrode length of 3 m. Lengths over 3 m are available upon request. Shorten the red cable in the connection box, so approximately 80 mm (measured from the bottom of the connection box) remain. Strip the insulation at the ends of the red and blue cables to about 10 mm, insert the wires, without twisting them, as far as possible into the swivel connector that was supplied with the connection box and connect them by turning the connector clockwise. Next, the ignition tip is screwed on.

If a short ignition rod is required, the tip adapter HE-SSR-0.0 (325 mm) can be screwed directly onto the existing connection box, the red high tension cable is connected as described above, and screw the ignition tip on. The shortest available complete ignition rod length is 545 mm by using the tip adapter HE-SSR-0.0 (325 mm) and the HE-S (200mm), by using the HE-L it is 1000 mm. The stainless steel extension tubes (ET) will be add automatically to reach the required total length of the ignition rod that has to be specified by the user.

The flexible metal protection sleeve HEC-3-QD (with integrated PE and high tension conductor) comes in a standard length of 3 m (optional length of 5 m available) and with high-voltage connectors on both ends. These are plugged into the high-voltage power socket of the connection box and the high-energy ignition unit and fastened with the retaining ring. Please note: It is important to turn the retaining ring until the very last turn. Guide the complete assembled ignition electrode into the combustion chamber and fasten.

Connect the customer's power supply cable (after ensuring the power is off and secured against switching back on) into the high-energy ignition unit, connect the wires for ignition monitoring and supply power to the unit.

Switching on the power will immediately generate 4-5 ignition sparks per second. The transition of the ignition spark can be seen through the built-in inspection window. The ignition spark monitoring relay switches simultaneously.

A functioning ignition system consists of the following individual components:

HE-PP-12-QD	High-energy power pack unit, quick disconnect version
HEC-X-QD	High-energy cable in metal protection sleeve (with PE and high tension conductor), with connectors on both ends. Length 3 m or 5 m **X** indicates the length: e.g. HEC-3-QD for 3 m
CB-QD	Connection box with quick disconnect
HE-SSR-0.0	Tip Adapter for ignition tip (length 325 mm)
HE-S or HE-L	High energy ignition tip HE-S (length 200mm) or HE-L (length 675m)
ET 0.5 and/or ET1.0	Stainless Steel Extension Tubes 0.5m and/or 1.0m long, if

required. In addition, the safety instructions on page 4 must also be respected, as a minimum.

The power supply cable must be provided by the customer and is not included in the delivery, but can be offered upon request.

Carefully read through the whole of this page before first use and observe the information on page 15:

Due to the use of the high-voltage plug, the high-energy ignition unit is pre-wired.

On the external PE connection (protective earth) of the high-energy supply unit, a cable with a minimum cross-section of 4 mm^2 must be connected to the earth potential point of the burner (see the assembly instruction below).

8mm of the insulation of the PE wire must be removed to allow the supplied yellow ring terminal to be attached, using the appropriate crimping pliers (specifically designed for insulated self-locking crimped on terminals). The self-locking feature ensures, by engaging at the endpoint, that the maximum available contact is achieved.

This ensures that the full contact is available to provide maximum earth potential, allowing the system to function correctly. The yellow ring terminal is applied to the external earthing bolt on the casing with a plain washer first, then the ring terminal, followed by the serrated lock washer and finally the nut.

FIGURE 3. Ignition electrode and ignition unit in kit form (HE-Kit)

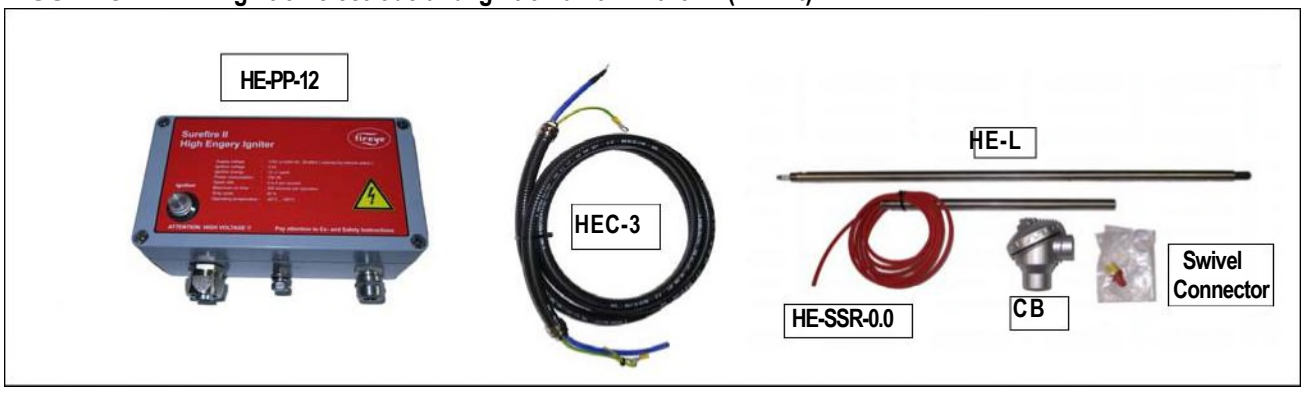

Consists of: Power pack HE-PP-12 / HEC-3 / Tip adapter HE-SSR-0.0 / Tip Long HE-L, connection box CB and swivel connector

Assembly: The kit, consisting of the individual parts above, will make an igniter 1m long, and must be assembled by the user.

The advantage is the reduced packed size, and resulting low shipping costs.

Start the assembling with the ignition rod.

The length of the ignition electrode, including the ignition tip, starts at 1m up to a maximum of 3 m The

complete length of the igniter is adjustable by addition of stainless steel extension tubes, each with male and female threading, in increments of 0.5 m and 1m. The extension tube ET will be screwed onto the existing connection box and tightened with an appropriate spanner. Once the required ignition length (less 325 mm for the tip adapter and required ignition tip HE-S with 200 mm or HE-L with 675 mm) is achieved, the red high voltage power cable of the tip adapter is fed directly through the remaining opening of the connection box, the 325 mm long tip adapter HE-SSR-0.0 is screwed onto the thread of the last extension tube and tightened tight with a suitable spanner. The red high voltage ignition cable of the tip adapter HE-SSR-0.0 is designed for a maximum ignition electrode length of 3 m. Lengths over 3 m are available upon request. Shorten the red cable in the connection box, so approximately 80 mm (measured from the bottom of the connection box) remain. Strip the insulation at the ends of the red and blue cables to about 10 mm, insert the wires, without twisting them, as far as possible into the swivel connector that was supplied with the connection box and connect them by turning the connector clockwise. Next, the ignition tip is screwed on.

The power supply cable must be provided by the customer and is not included in the delivery, but can be offered upon request.

Carefully read through the whole of this page before first use and observe the information on page 15:

In the high-energy ignition unit, the flexible metal protection sleeve (the end with integrated 3 m long high energy conductor that has the pre-fitted ring terminal with heat-shrink tubing and the PE-wire) is guided into the casing and screwed tight from the inside by means of union nut. The high energy cable is secured firmly into the ignition unit using the screwed high voltage fitting. 8mm of the insulation of the PE wire is removed, and the yellow ring terminal is attached using the appropriate crimping pliers (designed for insulated self-locking crimped on terminals). The self-locking feature ensures, by engaging at the endpoint, that the maximum contact is achieved. This ensures that the full contact is available to provide maximum earth potential, allowing the system to function correctly. The ring terminal is now connected to the earthing bolt, with the plain washer first, then the ring terminal, the serrated lock washer and finally the nut.

On the external earthing connectors, a cable of $4mm^2$ minimum cross section must be connected to the earth potential of the burner (see the assembly instruction described earlier).

The other end of the flexible protection sleeve is screwed directly into the connection box and tightened with an appropriate spanner.

Connect the customer's power supply cable (after making sure the power is off and secured against switch-ing

back on) into the high-energy ignition unit, connect the wires for ignition monitoring and supply power to the unit. Switching on the power will immediately generate 4-5 ignition sparks per second. The transition of the ignition spark can be seen through the built-in inspection window. The ignition spark monitoring relay switches simultaneously.

In addition, the safety instructions on page 4 must also be respected, as a minimum.

Specifications

High-Energy Ignition Unit

Casing:	die-cast aluminum
Dimensions (LxWxH):	220x120x95 mm
Weight:	3.25 kg
Protection class:	IP 65
Ambient temperature:	-40°C to +60°C
Temperature monitoring (power transformer):	120° C
Power supply (ignition in):	115VAC or 230VAC (switchable), 50/60 Hz
Rated current:	approx. 1300 mA at 115 V or 650 mA at 230 V
External protection:	4A / type D
Power input:	approx. 150 VA
Output voltage:	2000 VDC
Ignition pulses:	approx. 4-5 pulses / second
Ignition energy:	12 joule / pulse (48 to 60 joule / second)
Duration:	50% ED
Continuous operation:	300 sec
Integrated ignition monitoring:	Proof of spark relay, potential free contact (maximum contact load: 120V/230VAC @ 10 A or 24VDC @ 8 A)

High-Energy Ignition Electrode

Material:	stainless steel (1.4571)
Diameter:	16 mm
Standard length full ignition electrode:	1000 mm to 3000 mm
Length exchangeable ignition tip:	200 mm or 675 mm
HESI tip (HE-S, HE-L) thread;	9/16”-18 tpi- unf
Maximum temperature ignition tip:	800°C (1000°C for max. 10 sec)
Ignition tip service life:	approx. 400.000 ignitions
Main HESI rod and Extension rods:	M14, 1mm Depth
Junction box material	Cast Aluminium IP65 rated
Junction box threads:	M14, 1mm Depth
GTD service life:	approx. 200,000 sparks (depending on usage)

Power supply cable to be provided by the customer, incl. ignition spark monitoring:

Cable type (standard or similar):	BiHF(K)-J (with 6 individual wires 1,5 mm^2 incl. PE wire)
Temperature range:	- 25°C to at least + 135°C
Oversheath:	oil resistant, halogen-free, flame retardant and self-extinguishing.

ATEX Power pack

Housing material	Aluminum die casting. Stainless steel option available.
Dimensions	309x313x225mm (Nom 12.2"x12.3"x8.9")
Environmental	Zone 1 Eexd IIC T5, T6 IP66
Weight	22 kg for aluminum enclosure
	48 kg for stainless steel, (special order only)

Operating temperature -40°C to +60°C (-40°F to +140°F)

Internal over temperature protection at 100°C (212°F) 120°C Temperature Fuse integrated in transformer

ATEX HESI rod

Terminal box	Aluminum die casting. Stainless steel option available.
Environment	IP66/IP67 Zone 1 EExd IIC T6
HESI rod Length	Maximum 3.5 Meters (11.5') x 16mm (5/8") diameter.
	For lengths greater than 3.5 m contact factory.
Material	Stainless Steel (1.4301/304) up to 800°C (1000°C for max 10 sec.)

Retraction Coaxial system, with soft close end caps

Materials

Main cylinder	Extruded Aluminum
End caps	Die cast Aluminum
Retraction rod	150 mm (6") ID 16.4 mm OD 20.0 mm Length 563 mm
	223 mm (9") ID 16.4 mm OD 20.0 mm Length 715 mm
	304 mm (12") ID 16.4 mm OD 20.0 mm Length 876 mm
	458 mm (18") ID 16.4 mm OD 20.0 mm Length 1175 mm
	Stainless 316

Environment Temperature Hi Temp -10°C to +150°C short peak + 200°C

Standard temp -40°C to +80°C

Weight	6”	3.25 kg.
	9”	4.05 kg
	12”	4.76 kg
	18”	6.38 kg

Air supply	Clean dry air at 6Barg (Max 10Barg Min 3Barg)
	Solenoid Actuators
Electrical	24vdc 4.8W
	110/230VAC 8.5 VA
Environment	-40°C to +70°C IP65
ATEX option	-40°C to +70°C EExMb Zone 1/2

FIGURE 4. **Electrical connection of high-energy ignition unit HE-PP-12**

Cable entry for supply voltage (ignition ON)

High voltage cable connection (to the ignition electrode)

Electrical bonding connection (earthing connection to the installation)

Connection assignment

NO: Ignition monitoring / NO= Normally Open
C: Ignition monitoring / Common
NC: Ignition monitoring / NC= Normally Closed
L: Hot (Phase L1)
N: Neutral
PE: Protective Earth

Electrical connection (230 VAC) (regarding figure 6):

Electrical work during installation and commissioning may only be carried out by professional electricians. In principle, all work on the high-energy ignition system requires qualified professionals.

Before the electrical connection is established, the ignition lance must be guided into the combustion chamber and secured. Make sure to observe the general safety instructions on page 4, then open the lid of the casing. Check the individual wires of the power supply cable to ensure they are not live.

1. Check and set power supply at the latching switch (see figure 7), 115 VAC or 230 VAC.
2. Use BiHF(K)-J (or similar) as power supply cable.
3. Insert the cable into the right-hand cable gland (marking 115/230 VAC)
4. Wire connection for:
   a. Phase L1 to terminal L
   b. Neutral wire to terminal N
   c. Protective ground wire to terminal PE
   d. Power supply for ignition monitoring to terminal C
   e. Feedback ignition ON to terminal NO
   f. Feedback ignition OFF to terminal NC
5. Pull the cable back, but not to the extent that the connected wires are under tension, tighten the cable gland.
6. Close the lid on the casing and perform a function test.

FIGURE 5. Latching switch for switching the supply voltage.

Check settings before turning on the supply power.

The unit will be shipped with switch located to 230.

FIGURE 6. Electrical connection of the ignition electrode in the connection box.

Exchangeable ignition tips

FIGURE 7. HE-S short ignition tip: screwed in, 200 mm

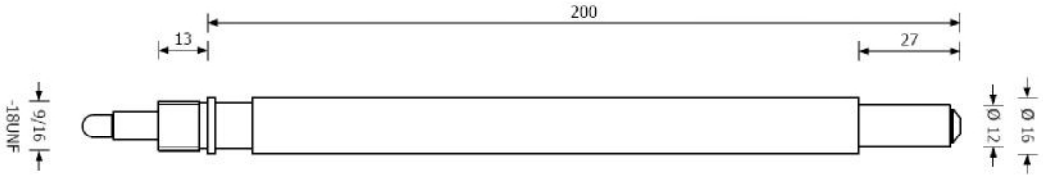

FIGURE 8. HE-L long ignition tip: screwed in, 675 mm

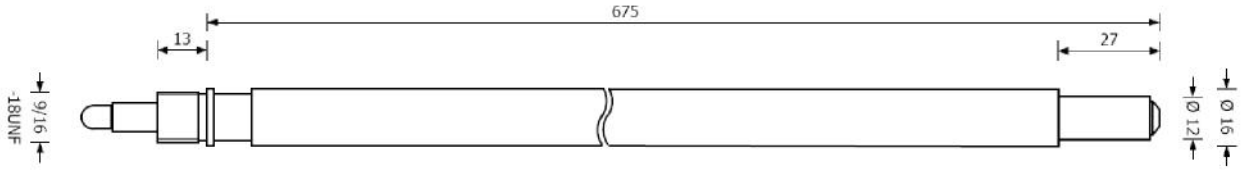

The ignition tips are available in the two lengths specified. Due to the external threading, these can be quickly and easily screwed into the connection adapters or replaced in case of malfunction (caused by wear).

Operation

With the High-Energy Ignition System Surefire II, the ignition sparks are turned on or off by applying or removing the power supply. After starting the ignition and subsequent positioning of the ignition electrode tip (see image below), the ignition spark must be exposed to an ignitable fuel-air mix.

After at most 3 seconds, the fuel should ignite. We recommend that the presence of this flame should be monitored with a flame detector. When the total ignition time has expired, the ignition electrode should be retracted from the hot flame area (to protect the ignition tip) and the ignition should be turned off. If no flame occurs, we refer to the section Troubleshooting on page 19.

To prevent damage to the high-energy ignition unit through frequent ignition attempts or too long ignition times (e.g. during commissioning), a bimetal switch has been integrated in the ignition transformer. If the ignition transformer reaches an operating temperature above 120°C, the ignition process is automatically interrupted. When the coil cools down to under the response temperature of the bimetal switch, the contact closes automatically. During normal operation as specified, this should not occur.

Please note that the ignition unit should only be operated within the maximum ON time limits (and resulting intervals) as laid out in the technical specifications.

Shorter ignition times extend the life cycle of the ignition tip.

Note for use in an oil burner

The optimal position of the ignition tip is in the border area of the spray cone behind the baffle plate. The optimal position is established by axial displacement of the high-energy ignition equipment. When heavy oil is used, the oil must be heated to 90° C to 130° C to ensure reliable atomization. The finer the oil particles, the more ignitable the fuel-air mixture.

Oil lance with nozzle

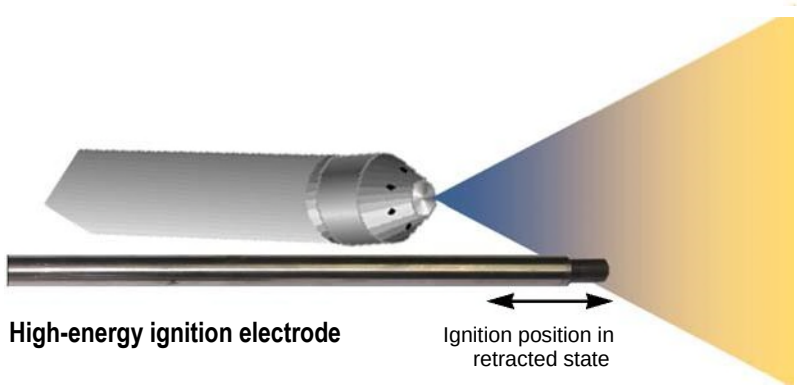

Note for use in a gas burner

With gas burners, the position of the ignition tip behind the swirl disk is not critical.

The ignition must take place with light load, to ensure the flow rate of the ignitable fuel-air mix remains low. Ignition only takes place when the gas-air mixture is thoroughly mixed and atomized.

Recommended Spare parts

Please follow the instructions on page 15 and observe the general safety instructions on page 4 before you open one unit.

Fireye recommends the following spare parts:

HE-CRD: Exchangeable full completed printed circuit board to be used in Power Pack for all versions (except the battery packed version)

GDT: Gas discharge tube

KCT-3: Spring, ceramic and 3m fixed high tension cable (to be used as a part of HE-SSR0.0)

HE-S: Exchangeable spark tip Short, length 200 mm

HE-L: Exchangeable spark tip Long, length 675 mm

Maintenance

Please carefully read the safety instructions on page 4 before undertaking any maintenance work.

In principle, the high-energy ignition system is maintenance-free, but inspections should be carried out at regular intervals to check for dirt and structural integrity (e.g. possible damage to the metal protection sleeve). The high-energy ignition tip can be cleaned with a wire brush.

The service life of the ignition tip is reached at around 400,000 ignitions and can be less if the equipment is not used according to the specifications.

Troubleshooting

Operation of the high-energy ignition unit includes charging capacitors to a voltage of up to 2000 V DC. This voltage can still be stored after switching of the power supply. The capacitors are discharged within 120 seconds by means of discharge resistors. Only after this may the lid of the high-energy ignition unit be opened.

Please observe the safety instructions on page 4.

In principle, the ignition system should not be repaired on site. If a malfunction of the ignition system is detected, the fault can be localized as follows:

1. Verifying the supply voltage

   When driving the ignition unit, alternating voltage between terminals L and N (see page 15, image 6 for the position), and between L and PE should be applied. No voltage should be measurable between N and PE.

2. Verifying the ignition unit with regards to overheating

   When the temperature rises above 120° C, the power supply to the ignition transformer is automatically interrupted. Wait approximately 10 minutes in order for the ignition transformer to cool down and the bimetal switch the close again. After this, the system continues to operate.

3. Verification of ignition tip functioning

WARNING: HIGH VOLTAGE !!!

Before replacing the ignition tip or opening the ignition unit, it is imperative to switch off the power supply and secure it against switching back on again, in order to prevent inadvertent ignition.

The easiest and quickest way to identify a defect is to replace the ignition tip by a new one.

ATEX systems

In general both power pack and HESI rod will require to be ATEX certified, however if the power pack is located in a safe area only the rod will need to be an ATEX device. Check the local requirements to ensure compliance with regulations.

ATEX power pack.

A standard power pack circuit board is fitted into the ATEX enclosure. This enclosure also has provision for mounting a Fireye MBCE, Flame rod (Ionization rod) amplifier. This should be defined at the point of order and is priced according to the standard Fireye price list.

FIGURE 9. **ATEX enclosure**

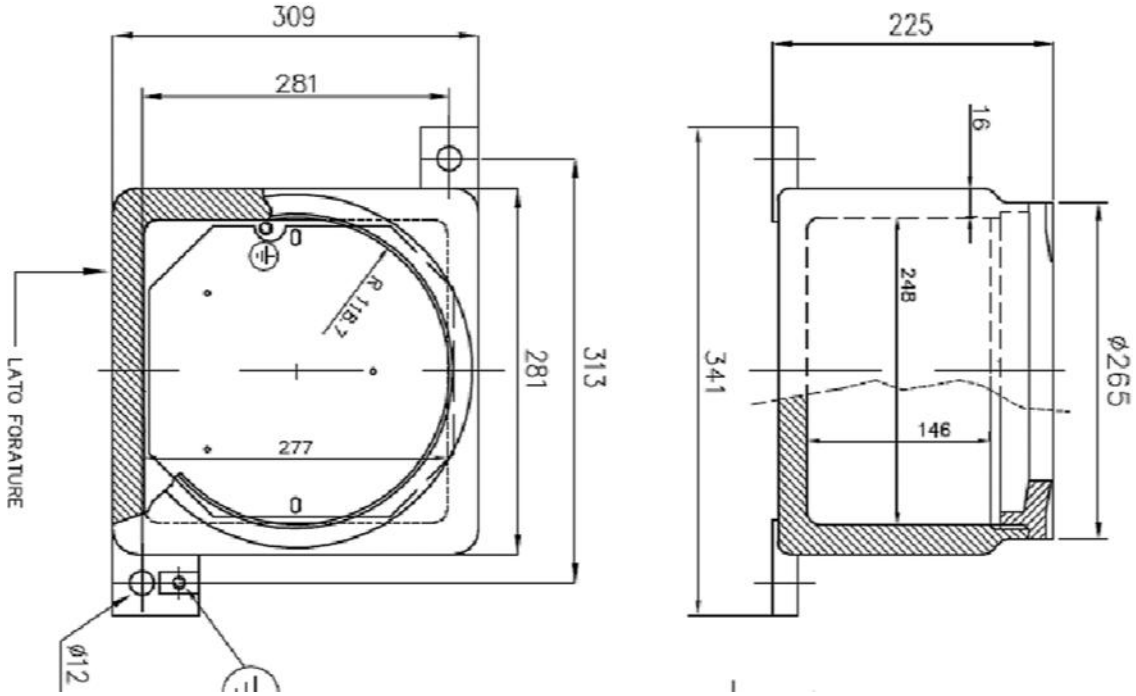

Figure 11 shows the dimensions of the ATEX enclosure for the power pack. Cable glands are not supplied, but are available on request.

The housing is made of aluminum, explosion proof, **ATEX/IECEx** - Exd IIC T5, T6 IIP66 certified complete with lugs for wall mount: The housing includes:-

Holes and spacers mounted on the mount plate for power pack

Optional wiring bases for MBCE flame amplifier (amplifier not included in the scope of supply)

Ignition command relay 24Vdc (for remote ignition)

Terminal Strip

Each housing will have nr. 4 off M20 holes

Wiring bases will be pre-wired ready for plug in the amplifiers

ATEX HESI rods

The HESI rod is 16mm diameter. Typically a 16mm gland with olive should be used to seal the rod when installed into the burner. This fixing may be combined with a support tube which projects into the burner.

To comply with the ATEX approval the screw tip connection, MUST be inside the burner to ensure that there are no combustible leakages into the safe area.

Retraction systems

The Surefire retraction system uses a "co-axial" mounting of the HESI rod to provide a compact fixing arrangement. The standard retractors are available in 6", 9", 12", and 18" retraction lengths, all of which are pneumatically operated from a nominal 6Barg. (maximum 10Barg, minimum 3Barg) pressure line. The air must be clean and dry. Optionally these can be provided with the 5/2 way solenoid factory fitted to the retractor. Solenoids are available in standard or ATEX versions as required.

The retractor is supplied separately from the HESI rod, leaving the user to fit and position both parts. The HESI rod is inserted through the retractor, and held in position using a 2 part clamp (RET CLMP) at the non-burner end of the unit. Optional brackets are available to fix the retractor to the burner plate either by welding or screws. The HESI rod is then inserted complete with the tip in the optimum ignition position as shown earlier. Once correctly fitted, the rod is clamped to the retraction cylinder, with a 2 part clamp. 1 part is fitted to the retractor cylinder the second is fitted to the HESI rod. These 2 items are then screwed together to set the final position. An "O" ring is supplied, and must be fitted between the 2 clamps to provide a gas tight seal from the burner.

Retraction Coaxial system, with soft close end caps

Materials		
Main cylinder	Extruded Aluminum	
End caps	Die cast Aluminum	
Retraction rod	Stainless 316	
Environment Temperature	Hi Temp -10C to +150C short peak + 200C	
	Standard temp -40C to +80C	
Weight	6”	3.8Kg
	9”	4.6 Kg
	12”	5.5 Kg
	18”	7.1 Kg
Air supply	Clean dry air at 6Barg (Max 10Barg Min 3Barg)	

Solenoid Actuators

Electrical	24VDC 5W (110/230VAC 8.5VA option)
Environment	-40°C to 80°C
ATEX option	-40°C to 80°C

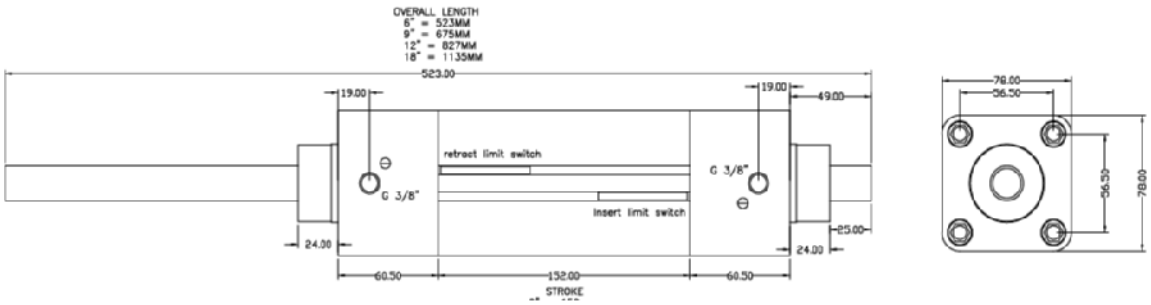

Piston mechanical dimensions

FIGURE 10. **Retraction dimensions fully inserted:-**

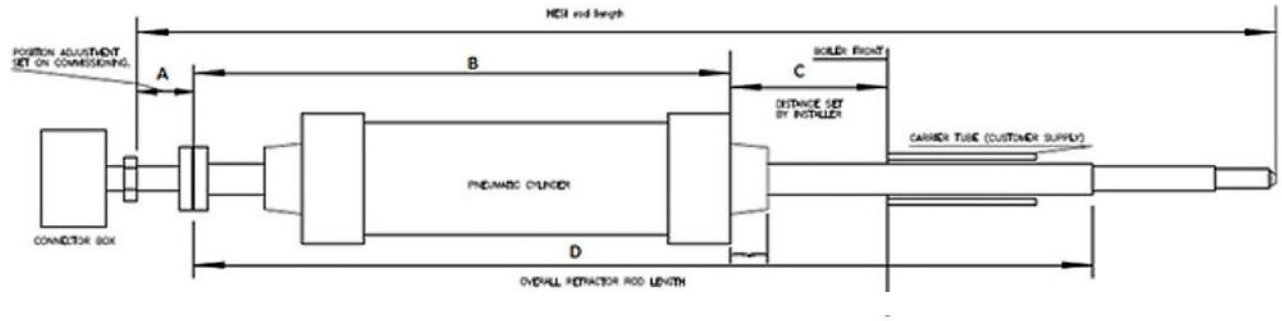

Table 1:

STROKE						
152mm (6")	A=100mm	B=342mm	C=100mm	D=563mm	HESI Rod Min	1M
228mm (9")	A=100mm	B=418mm	C=100mm	D=715mm	HESI Rod Min	1M
304mm (12")	A=100mm	B=494mm	C=100mm	D=867mm	HESI Rod Min	1.5M
458mm (18")	A=100mm	B=648mm	C=100mm	D=1175mm	HESI Rod Min	1.5M

INSTALLATION.

There are 4 available methods of installation recommended by Fireye.

The first utilizes angled brackets shown on right.

RET FB2

These brackets are mounted onto the front and/or rear of the cylinder, and then mounted onto support steel work of the customer supply.

The second utilizes a flat plate as shown on right.

This is fitted to the front of the retraction cylinder, and mounted to the boiler front via support steel work of customer supply.

The third utilizes the Fireye distance piece as shown below.

RET FB3

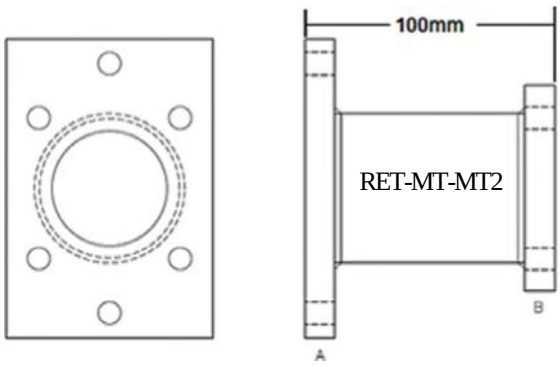

This consists of 2 flanges, separated by a short length of tube. One flange (B), is attached to the cylinder with 4 supplied bolts, the other end of the assembly is bolted to the burner front via flange A, by 2 bolts, customer supply.

Because of the different site situations, certain assumptions are made in order to arrive at the desired rod length. It can be seen from table 1 above that the distances A and C are variable, A is intended to show a typical position for the HESI tip to set the correct location within the fuel zone for reliable ignition. C is the distance between the cylinder and the boiler front, which is dependent on the method of fixing applied by the customer. It is advisable to ensure that distance C is no less than 50mm to minimize the heat transfer from the boiler front to the cylinder. The figure of 100mm was chosen as a sensible starting point. Should exact site mounting and necessary adjustment be known, then these figures can be modified to obtain a more accurate rod length. It should be noted that rod lengths are in multiples of 0.5M, Other non-standard lengths can be engineered, but with a time and cost penalty. It can be seen from the diagram that the 2 critical measurements are B and D, these are fixed for each stroke length.

The fourth shows the second of the Fireye distance pieces, shown below

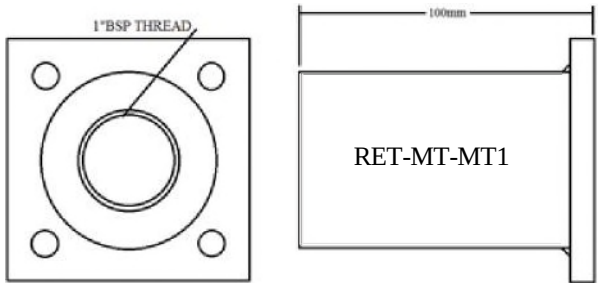

This consists of a flange, attached to short length of pipe, with a 1" BSP threaded hole at the other end. The flange, is attached to the cylinder with the 4 supplied bolts. The other end of the assembly is simply screwed on to a 1" nominal bore threaded pipe, which in turn is welded to the burner front. This tube can also act as the carrier tube for the HESI rod, its length being selected according to the position required for the HESI rod to successfully ignite the fuel.

Below is a typical retractor supplied fully assembled, ready for mounting the selected HESI rod, and mounting onto the boiler front

FIGURE 11.

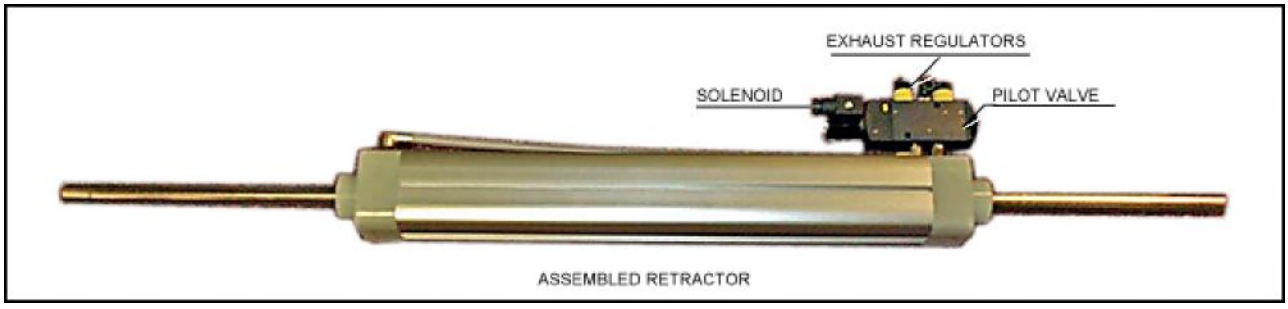

TYPICAL INSTALLATIONS

Figure 14 below shows typical installations of the retraction system. Figure 14/1 shows the cylinder mounted on to a simple steel bracket which has been welded onto the burner or boiler front plate. The cylinder is then bolted to the plate via 4 fixing holes. This mounting arrangement is supplied by the customer.

Figure 14/2 shows the cylinder mounted to the burner or boiler front via a simple distance piece bolted to the cylinder, and the boiler front. This mounting arrangement can be supplied by Fireye, part number RET MT2.

Figure 14/3 shows the cylinder mounted to the boiler front via a simple distance piece. This arrangement is bolted to the front of the cylinder and simply screwed to the mounting tube via the 1" BSP thread on the tube. the Fireye part number for this is RET MT1

FIGURE 12.

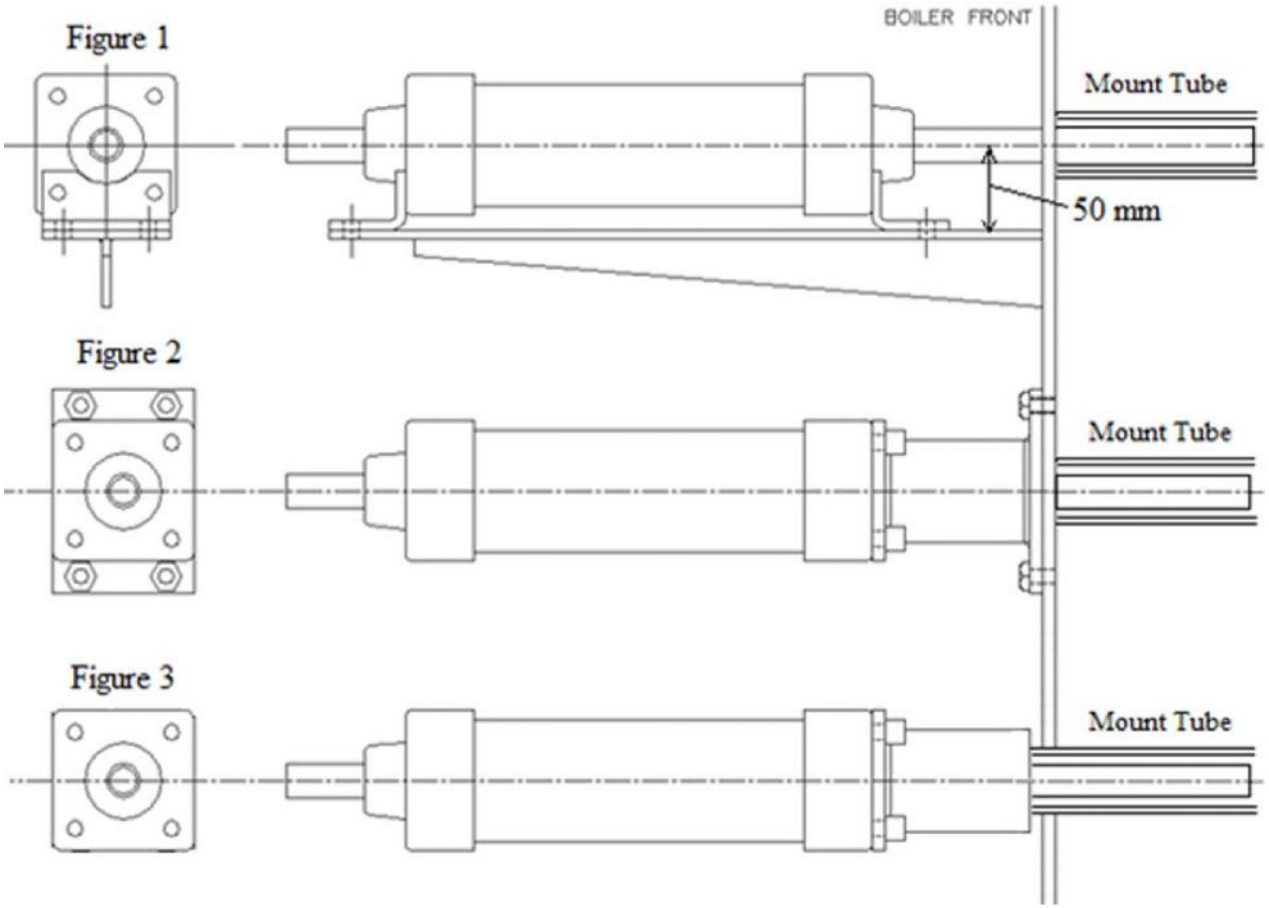

Both of the above arrangements have allowed a 100mm distance between the end of the cylinder and the burner or boiler front. This distance is fixed for Figure 14/2, using the Fireye mounting piece, but can be site set if required for Figure 14/1 above. The mount tube in the burner is customer supply only, and generally requires to be 1 inch nominal bore, or bigger.

Depending on windbox/furnace pressures, it may be necessary for the customer to provide a seal between the retractor rod and the burner/boiler front plate to prevent hot gases coming back out. Figures 14/2 & 14/3 resolve this issue as the assemblies provide a seal, and a tapped entry on the tube allows air to be blown into the space, and down the mount tube.

Having now fixed the retraction cylinder, the HESI rod is simply passed through the center of the tube, adjusted for the correct position when inserted, and simply locked onto the outer tube by means of a two part clamp arrangement, and secured by means of two bolts.

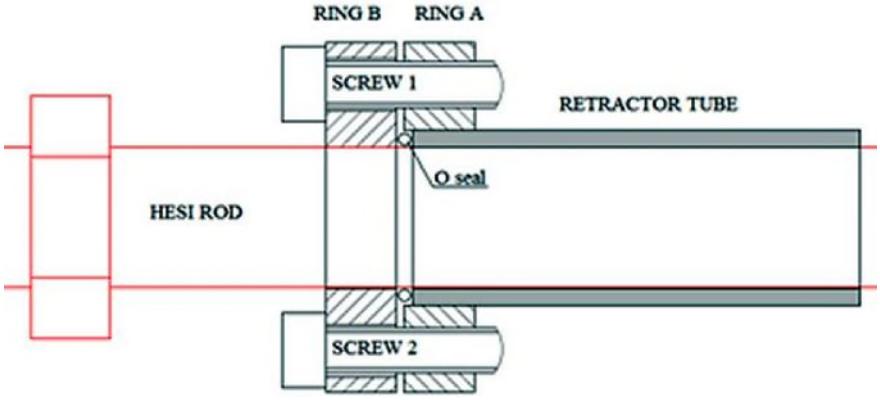

FIGURE 13.
Attaching the HESI to the retractor.

The mounting rings come as a pair. One ring (A), will fit on the retractor tube, the other (B), will fit on the HESI rod (P/N "RET CLMP"). The ring for the retractor rod is fitted first, allowing a small overhang beyond the end of the retractor rod of no more than 1mm. the 2 grub screws are then tightened to secure the ring to the tube. The second ring B is slid over the HESI rod, followed by the supplied O seal. The rod is now inserted into the retractor tube, and positioned as required. The O seal is now pushed back down the rod until it mates with the end of the retractor tube. Ring B is now pushed back and the holes aligned for the screws 1 and 2, which are inserted and tightened. The 2 grub screws are now tightened on to the HESI rod, securing the rod to the tube, with the O seal creating a seal at the end.

It should be noted that the grub screws should be tightened sufficiently to securely hold both parts, but not enough to deform the retractor tube or the HESI rod.

Retractor Setting Up Procedure.

CAUTION:

It should be noted that an air supply of 6 barg, unrestricted in its flow, will make the piston move at approximately 3M per second, and stop instantly on reaching the other end of the cylinder. At this inlet air pressure, the theoretical max force generated is 1870N (190Kgf).

Due to the nature of this equipment, and the warning above, it is essential that all setting up procedures are carried out exactly as detailed in the following procedure.

Ensure the cylinder is securely held in a safe position, and that both ends of the piston rod have sufficient room to move in and out of the cylinder, unimpeded, when operated. The operator, and anyone else present at the testing or setting up, is kept safely out of the way of the rod assembly, preferably behind barriers if possible. All adjustments can be carried out safely without the operator being in front or behind the traveling piston.

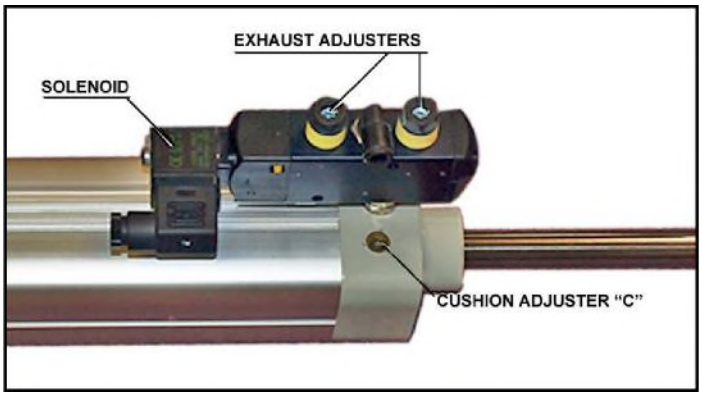

If the cylinder and solenoid valve combination is ordered as kits it is essential that great care is taken when setting up the rate of travel for the cylinder. The cylinder has the ability to cushion the end travel to prevent extreme de-acceleration causing damage to any attached equipment. Out of the box, this is not guaranteed to have been set, so it should be assumed that there is no cushioning. To this end, the small screw marked C, should be adjusted fully clock wise and then turned back 2 complete turns, to give an acceptable effect. In the kit, there are 2 exhaust flow control units that should be mounted directly on to the outlet ports of the solenoid valve, as above. These valves should also be adjusted fully clockwise by means of a hexagon key, and then returned 2 full turns, in order to restrict the amount of air passing into/out of the cylinder.

Having connected all the equipment together correctly, the air supply is adjusted to approximately 2 Bar, and connected to the valve inlet port. Power is applied to the solenoid valve, and the flow control valve adjusted to give an acceptable insertion speed. The return flow control valve is also adjusted to

give the required return speed. The two valves should then be finely adjusted to give the correct speeds in each direction. It should be noted that the two valves have to be adjusted together as their actions are related one to the other. Having achieved the correct stroke speed, the 2 cushion valves are adjusted to give an acceptable de-acceleration at each end of the travel. It is recommended that the time to insert the rod is adjusted to approximately 1 second for all stroke lengths. Having carried out the initial set up at this low pressure, the pressure should be increased to the operational pressure of 5 to 6 Bar. At this higher pressure, slight adjustment may be necessary to the cushioning and flow valves to ensure the correct operation. It should also be noted that there is a time limit for pilot or main flame detection, and extended insertion times can create problems with the burner or pilots ability to establish, and the scanners time to detect the subject flame.

The fully assembled unit is complete with solenoid valve, restrictors, pipework etc and fully tested and adjusted, thus removing the need to set up any parameters, other than fitting the selected HESI rod.

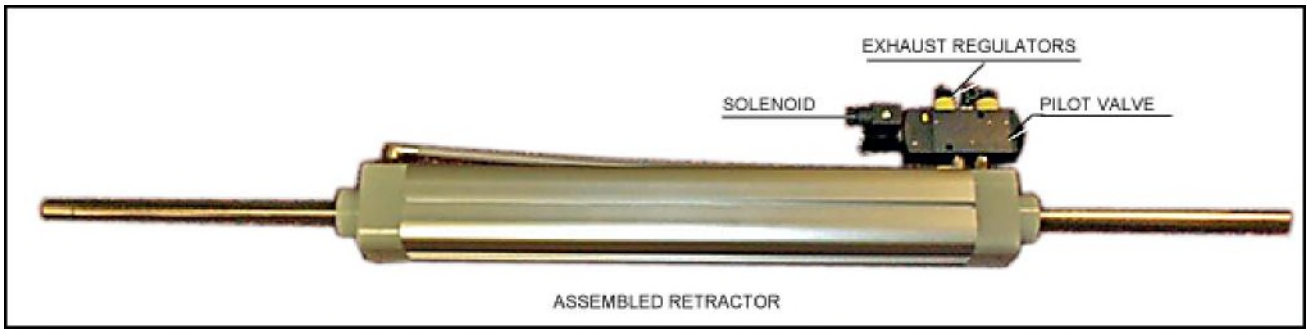

ASSEMBLED RETRACTOR

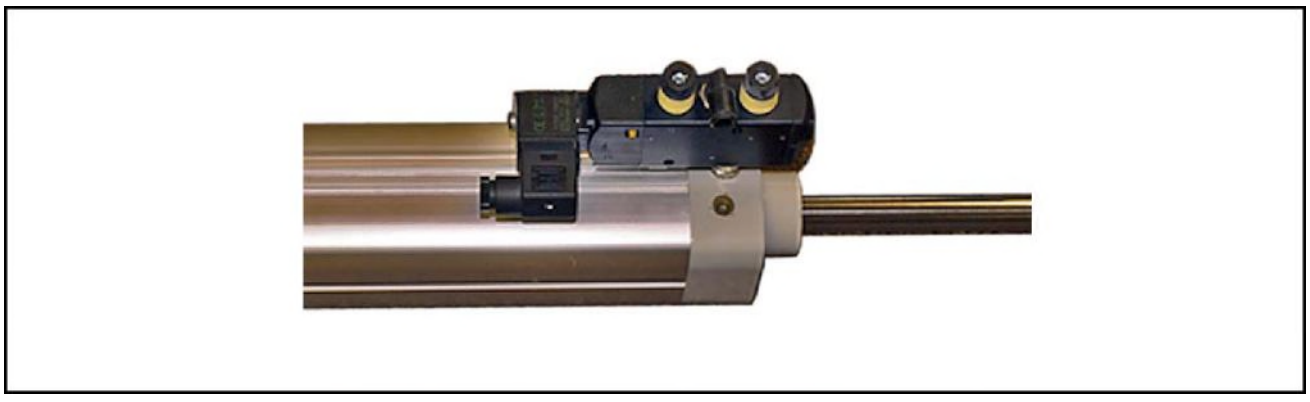

NOTICE

When Fireye products are combined with equipment manufactured by others and/or integrated into systems designed or manufactured by others, the Fireye warranty, as stated in its General Terms and Conditions of Sale, pertains only to the Fireye products and not to any other equipment or to the combined system or its overall performance.

WARRANTIES

FIREYE guarantees for *one year from the date of installation or 18 months from date of manufacture* of its products to replace, or, at its option, to repair any product or part thereof (except lamps, electronic tubes and photocells) which is found defective in material or workmanship or which otherwise fails to conform to the description of the product on the face of its sales order. **THE FOREGOING IS IN LIEU OF ALL OTHER WARRANTIES AND FIREYE MAKES NO WARRANTY OF MERCHANTABILITY OR ANY OTHER WARRANTY, EXPRESS OR IMPLIED.** Except as specifically stated in these general terms and conditions of sale, remedies with respect to any product or part number manufactured or sold by Fireye shall be limited exclusively to the right to replacement or repair as above provided. In no event shall Fireye be liable for consequential or special damages of any nature that may arise in connection with such product or part.

Attention!
Warranty is excluded for the wear parts spark tube GDT and ignition tips HE-S and HE-L, as service life of these parts depend on the number of ignitions and the conditions of use.

FIREYE®
3 Manchester Road
Derry, New Hampshire 03038 USA
www.fireye.com

SF-2001
January 08,2019
Supersedes August 08 , 2017